Skypod

OUTDOOR LIVING, MADE SIMPLE.

↗

Welcome to Skypod,
the outdoor kitchen of the future.

Instant Kitchen Pods Design

Catalogue 2026

by OPENSKY



STAINLESS STEEL BBQ POD



Skypod starts from something simple: people want an outdoor kitchen, but they don't want to go through a renovation. No contractors, no permits, no months of waiting. Skypod solves that. It arrives built, it opens, and it's done. The backyard isn't constructed. It's opened.

That's the whole concept: opening instead of building. Every pod, literally, opens. That gesture, the awning lifting, is the center of the brand. It's what the product does, every day, in front of you.



REDEFINING THE OUTDOOR KITCHEN

OUTDOOR LIVING, MADE SIMPLE.

THE COLLECTION

FOUR PODS. FOUR WAYS TO LIVE OUTSIDE.



Every name is a real outdoor space, and the number tells you its size. Pick the one that fits your backyard, then make it yours.



PATIO | SKYPOD 220

The simplest, most universal outdoor space. Grill, sink and fridge in one pod, and nothing you don't need.

LENGTH	GRILL	FRIDGE
2210 MM	30”	21”



TERRACE | SKYPOD 270

Room to host. The essentials plus a range hood, a 32-inch TV and built-in Bluetooth sound.

LENGTH	GRILL	FRIDGE
2690 MM	30”	21”



GARDEN | SKYPOD 310

Made for the garden. A motorized retractable awning, a 36-inch grill, open storage and a tool cabinet with a built-in hose.

LENGTH	GRILL	FRIDGE
3139 MM	36”	24”



VERANDA | SKYPOD 380

The full ecosystem. A 46-inch grill, 42-inch TV, electric lift spice cabinet and side cabinets with planters and a garden hose.

LENGTH	GRILL	FRIDGE
3760 MM	46”	24”



PATIO

SKYPOD 220

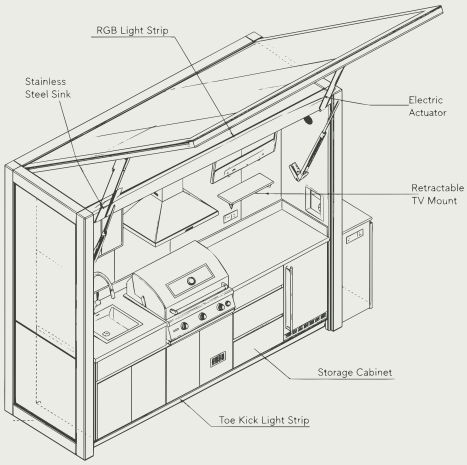

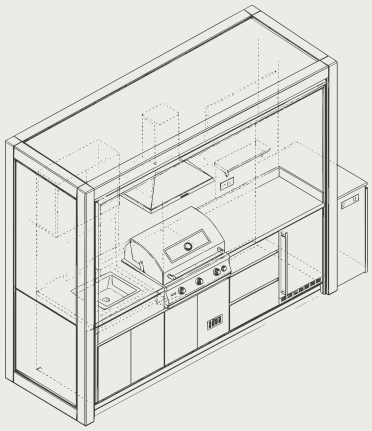

Skypod 220. Patio. Built to live outside.

LENGTH
2210MM

GRILL
30”

FRIDGE
21”





PATIO | SKYPOD 220

The simplest, most universal outdoor space. Grill, sink and fridge in one pod, and nothing you don't need. Skypod arrives built, it opens, and it's done. The backyard isn't constructed. It's opened.

LENGTH	GRILL	FRIDGE
2210MM	30”	21”

DIMENSION

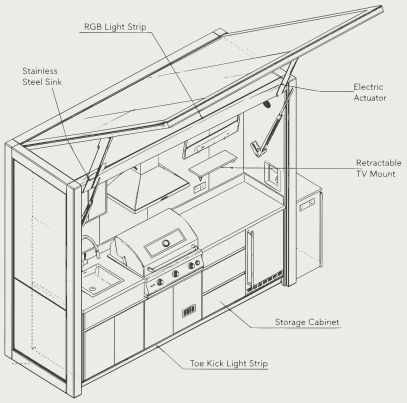

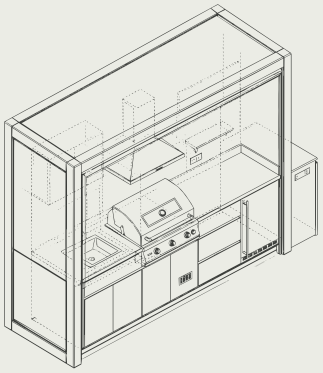

CATEGORY	NO	CONFIGURATION	SPECIFICATION
SIZE CONFIGURATION	1	BBQ Pod Outer Dimensions	L2210 × W1002 × H2350 mm
	2	Door Opening Angle	90°
	3	Total Open Dimensions	L2210 × W3202 × H2350 mm
BASIC CONFIGURATION	4	Material	Stainless steel
	5	Distribution Box	Rear-right side
	6	BBQ Pod Gate	Electric, remote control
	7	Stainless Steel Sink	Stainless steel undermount
	8	Faucet	Stainless steel pull-out
	9	BBQ Grill	Built-in 30-inch
	10	Refrigerator	21-inch, glass or stainless door
	11	Drawer	Blum soft-close
	12	Gate Surrounding RGB	24V adjustable RGB, remote control
	13	Lighting Function	COB 24V waterproof: top, inner top, side, toe kick
CUSTOMIZATION OPTIONS	14	Exterior Color	Customizable
	15	Cabinets Color	Door panel color customizable
	16	Interior Countertop	Stainless steel or sintered stone
	17	Wine Glass Holder	Optional
	18	Wall-mounted Storage	Customizable levels

MATERIALS





TERRACE

SKYPOD 270

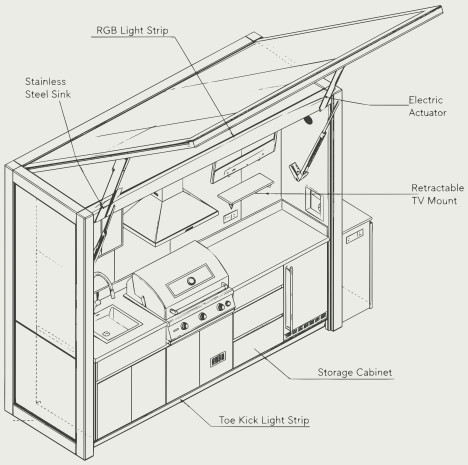

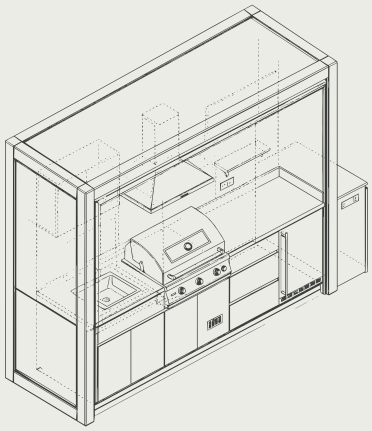

Skypod 270. Terrace. Built to live outside.

LENGTH
2690MM

GRILL
30”

FRIDGE
21”





TERRACE | SKYPOD 270

Room to host. The essentials plus a range hood, a 32-inch TV and built-in Bluetooth sound. Skypod arrives built, it opens, and it's done. The backyard isn't constructed. It's opened.

LENGTH	GRILL	FRIDGE
2690MM	30”	21”

DIMENSION

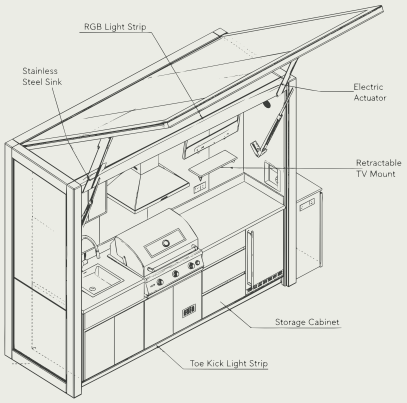

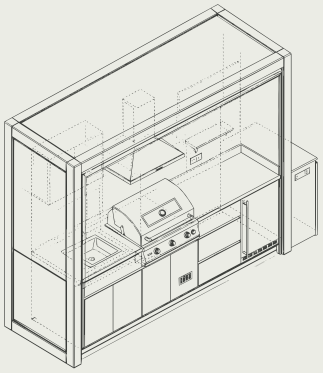

CATEGORY	NO	CONFIGURATION	SPECIFICATION
SIZE CONFIGURATION	1	BBQ Pod Outer Dimensions	L2690 × W1002 × H2350 mm
	2	Door Opening Angle	90°
	3	Total Open Dimensions	L2690 × W3202 × H2350 mm
BASIC CONFIGURATION	4	Material	Stainless steel
	5	Distribution Box	Rear-right side
	6	BBQ Pod Gate	Electric, remote control
	7	Stainless Steel Sink	Stainless steel undermount
	8	Faucet	Stainless steel pull-out
	9	BBQ Grill	Built-in 30-inch
	10	Refrigerator	21-inch, glass or stainless door
	11	Drawer	Blum soft-close
	12	Gate Surrounding RGB	24V adjustable RGB, remote control
	13	Lighting Function	COB 24V waterproof: top, inner top, side, toe kick
APPLIANCE CONFIGURATION	14	Range Hood	European style
	15	Television	32-inch LCD, telescopic bracket
	16	Built-in Audio	Wireless Bluetooth, premium sound
CUSTOMIZATION OPTIONS	17	Exterior Color	Customizable
	18	Cabinets Color	Door panel color customizable
	19	Interior Countertop	Stainless steel or sintered stone
	20	Wine Glass Holder	Optional
	21	Wall-mounted Storage	Adjustable levels

MATERIALS





GARDEN

SKYPOD 310

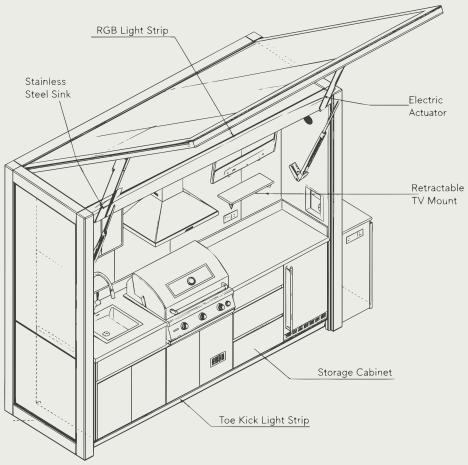

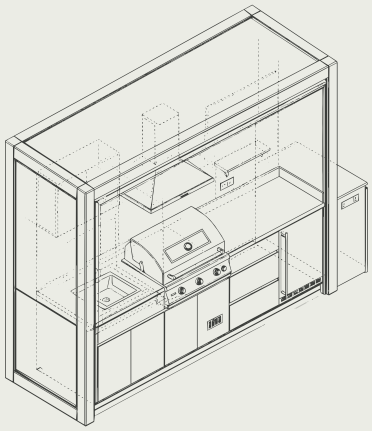

LENGTH
3139MM

GRILL
36”

FRIDGE
24”



GARDEN | SKYPOD 310

Made for the garden. A motorized retractable awning, a 36-inch grill, open storage and a tool cabinet with a built-in hose. Skypod arrives built, it opens, and it's done. The backyard isn't constructed. It's opened.

LENGTH	GRILL	FRIDGE
3139MM	36”	24”



DIMENSION

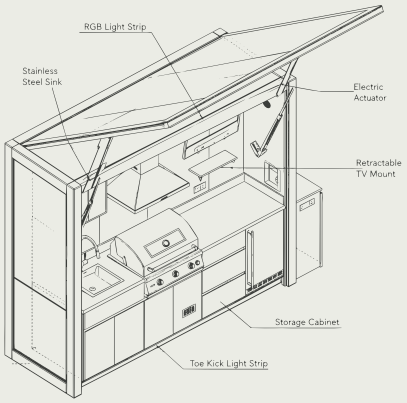

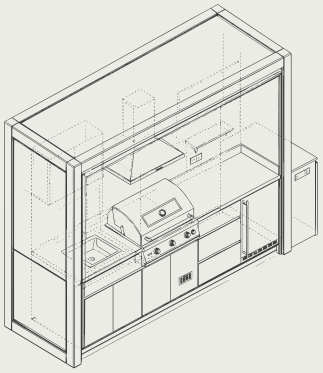

CATEGORY	NO	CONFIGURATION	SPECIFICATION
SIZE CONFIGURATION	1	BBQ Pod Outer Dimensions	L3139 × W1290 × H2330 mm
	2	Motorized Retractable Awning	900 mm
	3	Total Open Dimensions	L3139 × W2190 × H2330 mm
BASIC CONFIGURATION	4	Material	Stainless steel
	5	Distribution Box	Rear-right side
	6	Stainless Steel Sink	Stainless steel undermount
	7	Faucet	Stainless steel pull-out
	8	BBQ Grill	Built-in 36-inch
	9	Drawer	Blum soft-close
	10	Fixed Panel · Movable Shelf	Included
	11	Decorative Panel	Single-layer
	12	Open-Sided Storage	Included
	13	Tool Cabinet	Built-in 30 m garden hose
	14	Waterproof Outlet Switch	Included
APPLIANCE CONFIGURATION	15	Refrigerator	24-inch, glass or stainless door
	16	Built-in Audio	Wireless Bluetooth, premium sound
CUSTOMIZATION OPTIONS	17	Exterior Color	Customizable
	18	Cabinets Color	Door panel color customizable
	19	Interior Countertop	Stainless steel or sintered stone

MATERIALS





VERANDA

SKYPOD 380

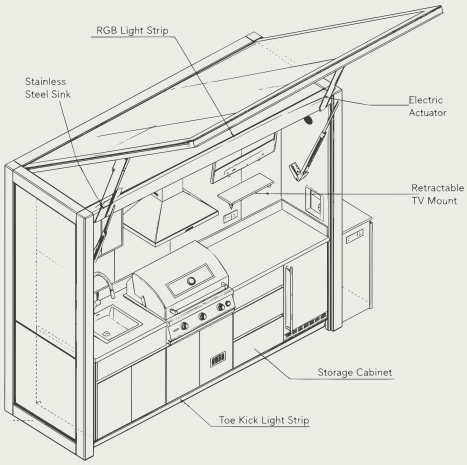

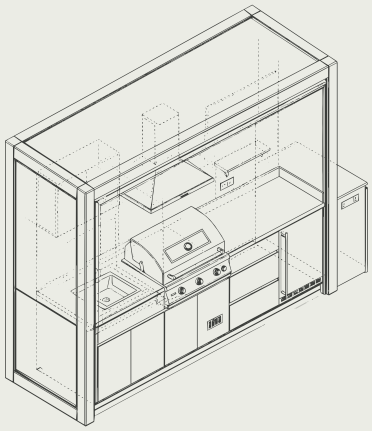

Skypod 380. Veranda. Built to live outside.

LENGTH
3760MM

GRILL
46”

FRIDGE
24”





VERANDA | SKYPOD 380

The full ecosystem. A 46-inch grill, 42-inch TV, electric lift spice cabinet and side cabinets with planters and a garden hose. Skypod arrives built, it opens, and it's done. The backyard isn't constructed. It's opened.

LENGTH	GRILL	FRIDGE
3760MM	46”	24”

DIMENSION

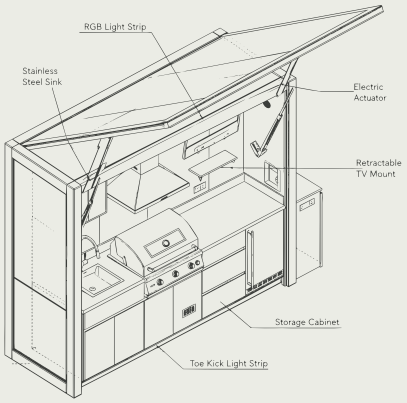

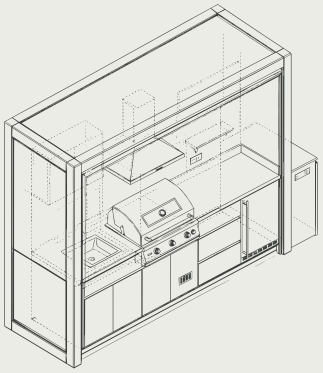

CATEGORY	NO	CONFIGURATION	SPECIFICATION
SIZE CONFIGURATION	1	BBQ Pod Outer Dimensions	L3760 × W1002 × H2350 mm
	2	Door Opening Angle	90°
	3	Total Open Dimensions	L3760 × W3202 × H2350 mm
BASIC CONFIGURATION	4	Material	Stainless steel
	5	Distribution Box	Rear-right side
	6	BBQ Pod Gate	Electric, remote control
	7	Stainless Steel Sink	Stainless steel undermount
	8	Faucet	Stainless steel pull-out
	9	BBQ Grill	Built-in 46-inch
	10	Drawer	Blum soft-close
	11	Gate Surrounding RGB	24V adjustable RGB, remote control
	12	Lighting Function	COB 24V waterproof: top, inner top, side, toe kick
	13	Electric Lift Spice Cabinet	Electric control
	14	Side Storage Cabinets	Planters, tool storage, 30 m hose
APPLIANCE CONFIGURATION	15	Refrigerator	24-inch, glass or stainless door
	16	Range Hood	European style
	17	Television	42-inch LCD, telescopic bracket
	18	Built-in Audio	Wireless Bluetooth, premium sound
CUSTOMIZATION OPTIONS	19	Exterior Color	Customizable
	20	Cabinets Color	Door panel color customizable
	21	Interior Countertop	Stainless steel or sintered stone
	22	Wine Glass Holder	Optional
	23	Wall-mounted Storage	Customizable levels

MATERIALS



CUSTOMIZATION

MADE YOURS, DOWN TO THE GRAIN.

Every Skypod is 100% customizable. Choose the finishes, colors and equipment that match your home, and we build it that way.



BLACK WALNUT

Wood-grain transfer for cabinet doors



ATHENS WHITE

Sintered stone countertop

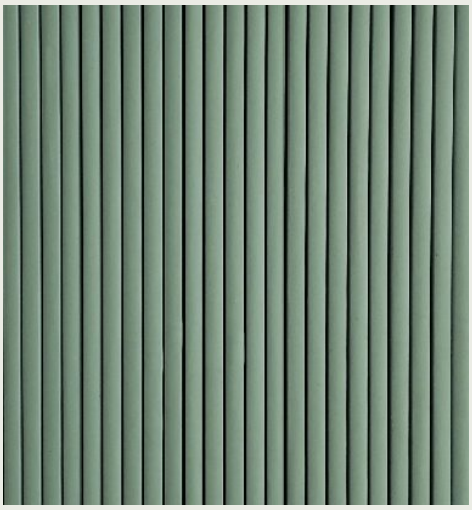

RETRO GREEN

Powder-coated fluted panels

EXTERIOR

Powder-coated in any color.

CABINET DOORS

Powder-coated colors or wood-grain finishes.

COUNTERTOP

304 stainless steel or sintered stone.

GRILL

30, 36, 42 or 46 inch, depending on the model.

REFRIGERATOR

Glass or stainless steel door.

LIGHTING

24V RGB, any color, by remote.

SIGNATURE COLORS

Black · Retro Green · Almond · Grey Blue · Stainless · Terra



Skypod

TERRACE | SKYPOD 270

REDEFINING THE
OUTDOOR KITCHEN.
IT'S A SOLUTION,
AND WE KNOW IT.

304 STEEL.
BUILT TO LIVE
OUTSIDE.

WARRANTY

BUILT TO LAST. BACKED BY US.

10

YEARS STRUCTURAL

Frame, cabinet body and stainless steel structure.

2

YEARS ELECTRICAL

Appliances, lighting, TV, audio and electric door.

WHAT'S COVERED

Free repair or replacement of any part with a manufacturing defect, under normal residential use, from the date of purchase. For the original owner.

WHAT ISN'T

Misuse, improper installation or maintenance, labor and service calls. Stainless steel needs regular cleaning to keep its finish.

304 STEEL. BUILT TO LIVE **OUTSIDE.**



OUTDOOR LIVING, MADE SIMPLE.

openskyusa.com

@skypod.usa

by OPENSKY